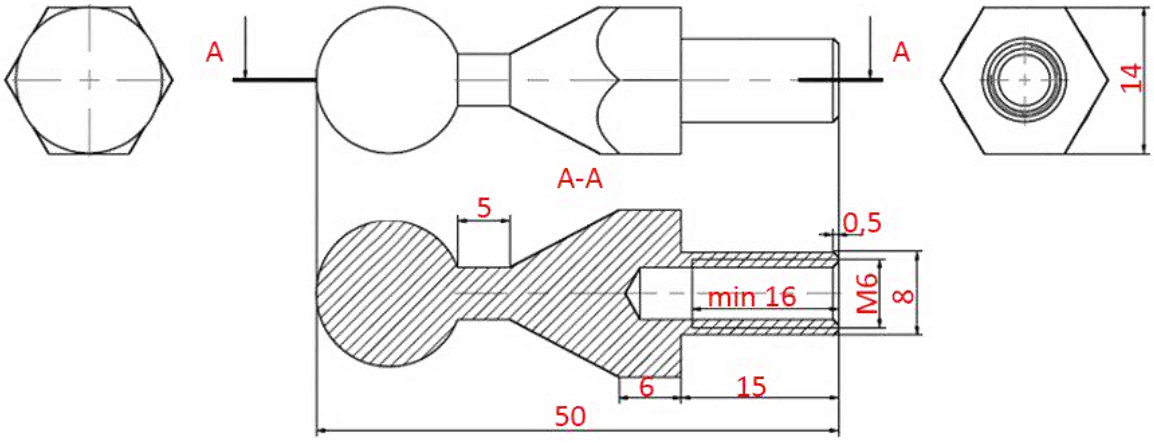11776 [mm]